U.S. DEPARTMENT OF HOMELAND SECURITY
Federal Emergency Management Agency
National Flood Insurance Program

ELEVATION CERTIFICATE

Important: Read the instructions on pages 1-8.

OMB No. 1660-0008
Expires February 28, 2009

SECTION A - PROPERTY INFORMATION

For Insurance Company Use:

A1. Building Owner's Name DOUGLAS MILLER — Policy Number

A2. Building Street Address (including Apt., Unit, Suite, and/or Bldg. No.) or P.O. Route and Box No.
104 BOLICK STREET — Company NAIC Number

City GEORGETOWN State SC ZIP Code 29440

A3. Property Description (Lot and Block Numbers, Tax Parcel Number, Legal Description, etc.)
T.M.S. # 05-0033-122-01-00

A4. Building Use (e.g., Residential, Non-Residential, Addition, Accessory, etc.) RES

A5. Latitude/Longitude: Lat. 33 21 42 N Long. 079 16 28 W Horizontal Datum: ☐ NAD 1927 ☒ NAD 1983

A6. Attach at least 2 photographs of the building if the Certificate is being used to obtain flood insurance.

A7. Building Diagram Number 6

A8. For a building with a crawl space or enclosure(s), provide
- a) Square footage of crawl space or enclosure(s) 194 sq ft
- b) No. of permanent flood openings in the crawl space or enclosure(s) walls within 1.0 foot above adjacent grade 4
- c) Total net area of flood openings in A8.b 770 sq in

A9. For a building with an attached garage, provide:
- a) Square footage of attached garage _____ sq ft
- b) No. of permanent flood openings in the attached garage walls within 1.0 foot above adjacent grade _____
- c) Total net area of flood openings in A9.b _____ sq in

SECTION B - FLOOD INSURANCE RATE MAP (FIRM) INFORMATION

B1. NFIP Community Name & Community Number	B2. County Name	B3. State
CITY OF GEORGETOWN 450087	GEORGETOWN	SC

B4. Map/Panel Number	B5. Suffix	B6. FIRM Index Date	B7. FIRM Panel Effective/Revised Date	B8. Flood Zone(s)	B9 Base Flood Elevation(s) (Zone AO, use base flood depth)
----- 0002	D	12-20-00	03-16-89	AE	9

B10. Indicate the source of the Base Flood Elevation (BFE) data or base flood depth entered in Item B9.
☐ FIS Profile ☒ FIRM ☐ Community Determined ☐ Other (Describe) _____

B11. Indicate elevation datum used for BFE in Item B9: ☒ NGVD 1929 ☐ NAVD 1988 ☐ Other (Describe) _____

B12. Is the building located in a Coastal Barrier Resources System (CBRS) area or Otherwise Protected Area (OPA)? ☐ Yes ☒ No
Designation Date _____ ☐ CBRS ☐ OPA

SECTION C - BUILDING ELEVATION INFORMATION (SURVEY REQUIRED)

C1. Building elevations are based on: ☐ Construction Drawings* ☐ Building Under Construction* ☒ Finished Construction
*A new Elevation Certificate will be required when construction of the building is complete.

C2. Elevations – Zones A1-A30, AE, AH, A (with BFE), VE, V1-V30, V (with BFE), AR, AR/A, AR/AE, AR/A1-A30, AR/AH, AR/AO. Complete Items C2.a-g below according to the building diagram specified in Item A7.
Benchmark Utilized 4140-B Vertical Datum 29
Conversion/Comments _____

			Check the measurement used.
a)	Top of bottom floor (including basement, crawl space, or enclosure floor)	5.8	☒ feet ☐ meters (Puerto Rico only)
b)	Top of the next higher floor	16.2	☒ feet ☐ meters (Puerto Rico only)
c)	Bottom of the lowest horizontal structural member (V Zones only)	15.0	☒ feet ☐ meters (Puerto Rico only)
d)	Attached garage (top of slab)	N/A	☒ feet ☐ meters (Puerto Rico only)
e)	Lowest elevation of machinery or equipment servicing the building (Describe type of equipment in Comments)	11.7	☒ feet ☐ meters (Puerto Rico only)
f)	Lowest adjacent (finished) grade (LAG)	4.9	☒ feet ☐ meters (Puerto Rico only)
g)	Highest adjacent (finished) grade (HAG)	5.1	☒ feet ☐ meters (Puerto Rico only)

SECTION D - SURVEYOR, ENGINEER, OR ARCHITECT CERTIFICATION

This certification is to be signed and sealed by a land surveyor, engineer, or architect authorized by law to certify elevation information. *I certify that the information on this Certificate represents my best efforts to interpret the data available. I understand that any false statement may be punishable by fine or imprisonment under 18 U.S. Code, Section 1001.*

☒ Check here if comments are provided on back of form.

Certifier's Name J. LUCKEY SANDERS License Number 4554

Title SURVEYOR Company Name SANDERS SURVEYORS LLC

Address 210 CLELAND STREET City GEORGETOWN State SC ZIP Code 29440

Signature J Luckey Sanders Date 03-02-08 Telephone (843) 527-2300

JLS 3/2/08

IMPORTANT: In these spaces, copy the corresponding information from Section A.	For Insurance Company Use:
Building Street Address (including Apt., Unit, Suite, and/or Bldg. No.) or P.O. Route and Box No. 104 BOLICK STREET	Policy Number
City GEORGETOWN State SC ZIP Code 29440	Company NAIC Number

SECTION D - SURVEYOR, ENGINEER, OR ARCHITECT CERTIFICATION (CONTINUED)

Copy both sides of this Elevation Certificate for (1) community official, (2) insurance agent/company, and (3) building owner.

Comments

ENCLOSURES UNDER HOUSE ARE STORAGE AREAS
17 SQ. FT. ELEVATOR SHAFT (EL:5.0') W/ TWO 144 SQ. FT. FLOOD VENTS IS NOT INCLUDED IN SECTION A8
SECTION C2e REFERENCES HEAT PUMP UNIT BESIDE HOUSE.

Signature [signature] Date 3/02/08

☐ Check here if attachments

SECTION E - BUILDING ELEVATION INFORMATION (SURVEY NOT REQUIRED) FOR ZONE AO AND ZONE A (WITHOUT BFE)

For Zones AO and A (without BFE), complete Items E1-E5. If the Certificate is intended to support a LOMA or LOMR-F request, complete Sections A, B, and C. For Items E1-E4, use natural grade, if available. Check the measurement used. In Puerto Rico only, enter meters.

E1. Provide elevation information for the following and check the appropriate boxes to show whether the elevation is above or below the highest adjacent grade (HAG) and the lowest adjacent grade (LAG).
a) Top of bottom floor (including basement, crawl space, or enclosure) is _____._____ ☐ feet ☐ meters ☐ above or ☐ below the HAG.
b) Top of bottom floor (including basement, crawl space, or enclosure) is _____._____ ☐ feet ☐ meters ☐ above or ☐ below the LAG.

E2. For Building Diagrams 6-8 with permanent flood openings provided in Section A Items 8 and/or 9 (see page 8 of Instructions), the next higher floor (elevation C2.b in the diagrams) of the building is _____._____ ☐ feet ☐ meters ☐ above or ☐ below the HAG.

E3. Attached garage (top of slab) is _____._____ ☐ feet ☐ meters ☐ above or ☐ below the HAG.

E4. Top of platform of machinery and/or equipment servicing the building is _____._____ ☐ feet ☐ meters ☐ above or ☐ below the HAG.

E5. Zone AO only: If no flood depth number is available, is the top of the bottom floor elevated in accordance with the community's floodplain management ordinance? ☐ Yes ☐ No ☐ Unknown. The local official must certify this information in Section G.

SECTION F - PROPERTY OWNER (OR OWNER'S REPRESENTATIVE) CERTIFICATION

The property owner or owner's authorized representative who completes Sections A, B, and E for Zone A (without a FEMA-issued or community-issued BFE) or Zone AO must sign here. *The statements in Sections A, B, and E are correct to the best of my knowledge.*

Property Owner's or Owner's Authorized Representative's Name

Address City State ZIP Code

Signature Date Telephone

Comments

☐ Check here if attachments

SECTION G - COMMUNITY INFORMATION (OPTIONAL)

The local official who is authorized by law or ordinance to administer the community's floodplain management ordinance can complete Sections A, B, C (or E), and G of this Elevation Certificate. Complete the applicable item(s) and sign below. Check the measurement used in Items G8. and G9.

G1. ☐ The information in Section C was taken from other documentation that has been signed and sealed by a licensed surveyor, engineer, or architect who is authorized by law to certify elevation information. (Indicate the source and date of the elevation data in the Comments area below.)

G2. ☐ A community official completed Section E for a building located in Zone A (without a FEMA-issued or community-issued BFE) or Zone AO.

G3. ☐ The following information (Items G4.-G9.) is provided for community floodplain management purposes.

G4. Permit Number	G5. Date Permit Issued	G6. Date Certificate Of Compliance/Occupancy Issued

G7. This permit has been issued for: ☐ New Construction ☐ Substantial Improvement

G8. Elevation of as-built lowest floor (including basement) of the building: _____._____ ☐ feet ☐ meters (PR) Datum _____

G9. BFE or (in Zone AO) depth of flooding at the building site: _____._____ ☐ feet ☐ meters (PR) Datum _____

Local Official's Name Title

Community Name Telephone

Signature Date

Comments

☐ Check here if attachments

FEDERAL EMERGENCY MANAGEMENT AGENCY
NATIONAL FLOOD INSURANCE PROGRAM

ELEVATION CERTIFICATE

O.M.B. No. 3067-0077
Expires December 31, 2005

Important: Read the instructions on pages 1 - 7.

SECTION A - PROPERTY OWNER INFORMATION

For Insurance Company Use:

BUILDING OWNER'S NAME
Douglas Miller

Policy Number

BUILDING STREET ADDRESS (Including Apt., Unit, Suite, and/or Bldg. No.) OR P.O. ROUTE AND BOX NO.
Southwest of the intersection of Bolick and Prince Streets

Company NAIC Number

CITY	STATE	ZIP CODE
GEORGETOWN	SC	29440

PROPERTY DESCRIPTION (Lot and Block Numbers, Tax Parcel Number, Legal Description, etc.)
T.M.S. # 05-33-122.01

BUILDING USE (e.g., Residential, Non-residential, Addition, Accessory, etc. Use a Comments area, if necessary.)
RESIDENTIAL

LATITUDE/LONGITUDE (OPTIONAL) (##° - ##' - ##.##" or ##.######°) HORIZONTAL DATUM: ☐ NAD 1927 ☐ NAD 1983 SOURCE: ☐ GPS (Type):____ ☐ USGS Quad Map ☐ Other: ____

SECTION B - FLOOD INSURANCE RATE MAP (FIRM) INFORMATION

B1. NFIP COMMUNITY NAME & COMMUNITY NUMBER	B2. COUNTY NAME	B3. STATE
450087	GEORGETOWN	SC

B4. MAP AND PANEL NUMBER	B5. SUFFIX	B6. FIRM INDEX DATE	B7. FIRM PANEL EFFECTIVE/REVISED DATE	B8. FLOOD ZONE(S)	B9. BASE FLOOD ELEVATION(S) (Zone AO, use depth of flooding)
0002	D	12-20-00	3-16-89	AE	9

B10. Indicate the source of the Base Flood Elevation (BFE) data or base flood depth entered in B9.
☐ FIS Profile ☒ FIRM ☐ Community Determined ☐ Other (Describe): ____

B11. Indicate the elevation datum used for the BFE in B9: ☒ NGVD 1929 ☐ NAVD 1988 ☐ Other (Describe): ____

B12. Is the building located in a Coastal Barrier Resources System (CBRS) area or Otherwise Protected Area (OPA)? ☐ Yes ☒ No Designation Date____

SECTION C - BUILDING ELEVATION INFORMATION (SURVEY REQUIRED)

C1. Building elevations are based on: ☒ Construction Drawings* ☐ Building Under Construction* ☐ Finished Construction
*A new Elevation Certificate will be required when construction of the building is complete.

C2. Building Diagram Number _ (Select the building diagram most similar to the building for which this certificate is being completed - see pages 6 and 7. If no diagram accurately represents the building, provide a sketch or photograph.)

C3. Elevations – Zones A1-A30, AE, AH, A (with BFE), VE, V1-V30, V (with BFE), AR, AR/A, AR/AE, AR/A1-A30, AR/AH, AR/AO
Complete Items C3.-a-i below according to the building diagram specified in Item C2. State the datum used. If the datum is different from the datum used for the BFE in Section B, convert the datum to that used for the BFE. Show field measurements and datum conversion calculation. Use the space provided or the Comments area of Section D or Section G, as appropriate, to document the datum conversion.

Datum NGVD 29 Conversion/Comments ____

Elevation reference mark used _Does the elevation reference mark used appear on the FIRM? ☐ Yes ☒ No

o a) Top of bottom floor (including basement or enclosure)	6. 0 ft.(m)
o b) Top of next higher floor	16. 0 ft.(m)
o c) Bottom of lowest horizontal structural member (V zones only)	____. _ft.(m)
o d) Attached garage (top of slab)	____. __ft.(m)
o e) Lowest elevation of machinery and/or equipment servicing the building (Describe in a Comments area)	10. 0 ft.(m)
o f) Lowest adjacent (finished) grade (LAG)	4. 9 ft.(m)
o g) Highest adjacent (finished) grade (HAG)	5. 0 ft.(m)
o h) No. of permanent openings (flood vents) within 1 ft. above adjacent grade	2
o i) Total area of all permanent openings (flood vents) in C3.h	301 sq. in. (sq. cm)

License Number, Embossed Seal, Signature, and Date

3/13/07

SECTION D - SURVEYOR, ENGINEER, OR ARCHITECT CERTIFICATION

This certification is to be signed and sealed by a land surveyor, engineer, or architect authorized by law to certify elevation information.
I certify that the information in Sections A, B, and C on this certificate represents my best efforts to interpret the data available.
I understand that any false statement may be punishable by fine or imprisonment under 18 U.S. Code, Section 1001.

CERTIFIER'S NAME J. LUCKEY SANDERS LICENSE NUMBER 4554

TITLE LAND SURVEYOR COMPANY NAME SANDERS SURVEYORS

ADDRESS	CITY	STATE	ZIP CODE
210 CLELAND STREET	GEORGETOWN	SC	29440

SIGNATURE J. Luckey Sanders DATE 03-13-07 TELEPHONE 843-527-2300

IMPORTANT: In these spaces, copy the correspondin[g] information from Section A.			For Insurance Company Use:
BUILDING STREET ADDRESS (Including Apt., Unit, Suite, and/or Bldg. No., ... P.O. ROUTE AND BOX NO. Intersection of Prince Street & Bolick Street			Policy Number
CITY Georgetown	STATE SC	ZIP CODE 29440	Company NAIC Number

SECTION D - SURVEYOR, ENGINEER, OR ARCHITECT CERTIFICATION (CONTINUED)

Copy both sides of this Elevation Certificate for (1) community official, (2) insurance agent/company, and (3) building owner.

COMMENTS
GROUND FLOOR ENCLOSURE TO BE LESS THAN 300 SQ. FT.

☐ Check here if attachments

SECTION E - BUILDING ELEVATION INFORMATION (SURVEY NOT REQUIRED) FOR ZONE AO AND ZONE A (WITHOUT BFE)

For Zone AO and Zone A (without BFE), complete Items E1 through E4. If the Elevation Certificate is intended for use as supporting information for a LOMA or LOMR-F, Section C must be completed.

E1. Building Diagram Number _(Select the building diagram most similar to the building for which this certificate is being completed – see pages 6 and 7. If no diagram accurately represents the building, provide a sketch or photograph.)

E2. The top of the bottom floor (including basement or enclosure) of the building is __ft.(m) __in.(cm) ☐ above or ☐ below (check one) the highest adjacent grade. (Use natural grade, if available).

E3. For Building Diagrams 6-8 with openings (see page 7), the next higher floor or elevated floor (elevation b) of the building is __ft.(m) __in.(cm) above the highest adjacent grade. Complete items C3.h and C3.i on front of form.

E4. The top of the platform of machinery and/or equipment servicing the building is __ft.(m) __in.(cm) ☐ above or ☐ below (check one) the highest adjacent grade. (Use natural grade, if available).

E5. For Zone AO only: If no flood depth number is available, is the top of the bottom floor elevated in accordance with the community's floodplain management ordinance?
☐ Yes ☐ No ☐ Unknown. The local official must certify this information in Section G.

SECTION F - PROPERTY OWNER (OR OWNER'S REPRESENTATIVE) CERTIFICATION

The property owner or owner's authorized representative who completes Sections A, B, C (Items C3.h and C3.i only), and E for Zone A (without a FEMA-issued or community-issued BFE) or Zone AO must sign here. *The statements in Sections A, B, C, and E are correct to the best of my knowledge.*

PROPERTY OWNER'S OR OWNER'S AUTHORIZED REPRESENTATIVE'S NAME

ADDRESS | CITY | STATE | ZIP CODE

SIGNATURE | DATE | TELEPHONE

COMMENTS

☐ Check here if attachments

SECTION G - COMMUNITY INFORMATION (OPTIONAL)

The local official who is authorized by law or ordinance to administer the community's floodplain management ordinance can complete Sections A, B, C (or E), and G of this Elevation Certificate. Complete the applicable item(s) and sign below.

G1. ☐ *The information in Section C was taken from other documentation that has been signed and embossed by a licensed surveyor, engineer, or architect who is authorized by state* or local law to certify elevation information. (Indicate the source and date of the elevation data in the Comments area below.)

G2. ☐ A community official completed Section E for a building located in Zone A (without a FEMA-issued or community-issued BFE) or Zone AO.

G3. ☐ The following information (Items G4-G9) is provided for community floodplain management purposes.

G4. PERMIT NUMBER	G5. DATE PERMIT ISSUED	G6. DATE CERTIFICATE OF COMPLIANCE/OCCUPANCY ISSUED

G7. This permit has been issued for: ☐ New Construction ☐ Substantial Improvement

G8. Elevation of as-built lowest floor (including basement) of the building is: ____.__ft.(m) Datum: _____

G9. BFE or (in Zone AO) depth of flooding at the building site is: ____.__ft.(m) Datum: _____

LOCAL OFFICIAL'S NAME | TITLE

COMMUNITY NAME | TELEPHONE

SIGNATURE | DATE

COMMENTS

☐ Check here if attachments

FEDERAL EMERGENCY MANAGEMENT AGENCY
NATIONAL FLOOD INSURANCE PROGRAM

ELEVATION CERTIFICATE

O.M.B. No. 3067-0077
Expires December 31, 2005

Important: Read the instructions on pages 1 - 7.

SECTION A - PROPERTY OWNER INFORMATION

For Insurance Company Use:

BUILDING OWNER'S NAME
Douglas Miller

Policy Number

BUILDING STREET ADDRESS (Including Apt., Unit, Suite, and/or Bldg. No.) OR P.O. ROUTE AND BOX NO.
Southwest of the intersection of Bolick and Prince Streets

Company NAIC Number

CITY	STATE	ZIP CODE
GEORGETOWN	SC	29440

PROPERTY DESCRIPTION (Lot and Block Numbers, Tax Parcel Number, Legal Description, etc.)
T.M.S. # 05-33-122.01

BUILDING USE (e.g., Residential, Non-residential, Addition, Accessory, etc. Use a Comments area, if necessary.)
RESIDENTIAL

LATITUDE/LONGITUDE (OPTIONAL) (##° - ## ' - ##.## " or ##.######°)
HORIZONTAL DATUM: ☐ NAD 1927 ☐ NAD 1983
SOURCE: ☐ GPS (Type):____ ☐ USGS Quad Map ☐ Other: ____

SECTION B - FLOOD INSURANCE RATE MAP (FIRM) INFORMATION

B1. NFIP COMMUNITY NAME & COMMUNITY NUMBER	B2. COUNTY NAME	B3. STATE
450087	GEORGETOWN	SC

B4. MAP AND PANEL NUMBER	B5. SUFFIX	B6. FIRM INDEX DATE	B7. FIRM PANEL EFFECTIVE/REVISED DATE	B8. FLOOD ZONE(S)	B9. BASE FLOOD ELEVATION(S) (Zone AO, use depth of flooding)
0002	D	12-20-00	3-16-89	AE	9

B10. Indicate the source of the Base Flood Elevation (BFE) data or base flood depth entered in B9.
☐ FIS Profile ☒ FIRM ☐ Community Determined ☐ Other (Describe): ____

B11. Indicate the elevation datum used for the BFE in B9: ☒ NGVD 1929 ☐ NAVD 1988 ☐ Other (Describe): ____

B12. Is the building located in a Coastal Barrier Resources System (CBRS) area or Otherwise Protected Area (OPA)? ☐ Yes ☒ No Designation Date____

SECTION C - BUILDING ELEVATION INFORMATION (SURVEY REQUIRED)

C1. Building elevations are based on: ☒ Construction Drawings* ☐ Building Under Construction* ☐ Finished Construction
*A new Elevation Certificate will be required when construction of the building is complete.

C2. Building Diagram Number _ (Select the building diagram most similar to the building for which this certificate is being completed - see pages 6 and 7. If no diagram accurately represents the building, provide a sketch or photograph.)

C3. Elevations – Zones A1-A30, AE, AH, A (with BFE), VE, V1-V30, V (with BFE), AR, AR/A, AR/AE, AR/A1-A30, AR/AH, AR/AO
Complete Items C3.-a-i below according to the building diagram specified in Item C2. State the datum used. If the datum is different from the datum used for the BFE in Section B, convert the datum to that used for the BFE. Show field measurements and datum conversion calculation. Use the space provided or the Comments area of Section D or Section G, as appropriate, to document the datum conversion.
Datum NGVD 29 Conversion/Comments ____
Elevation reference mark used _Does the elevation reference mark used appear on the FIRM? ☐ Yes ☒ No

o a) Top of bottom floor (including basement or enclosure)	6. 0 ft.(m)
o b) Top of next higher floor	16. 0 ft.(m)
o c) Bottom of lowest horizontal structural member (V zones only)	____. _ft.(m)
o d) Attached garage (top of slab)	___. __ft.(m)
o e) Lowest elevation of machinery and/or equipment servicing the building (Describe in a Comments area)	10. 0 ft.(m)
o f) Lowest adjacent (finished) grade (LAG)	4. 9 ft.(m)
o g) Highest adjacent (finished) grade (HAG)	5. 0 ft.(m)
o h) No. of permanent openings (flood vents) within 1 ft. above adjacent grade 2	
o i) Total area of all permanent openings (flood vents) in C3.h 301 sq. in. (sq. cm)	

License Number, Embossed Seal, Signature, and Date

3/13-07

SECTION D - SURVEYOR, ENGINEER, OR ARCHITECT CERTIFICATION

This certification is to be signed and sealed by a land surveyor, engineer, or architect authorized by law to certify elevation information.
I certify that the information in Sections A, B, and C on this certificate represents my best efforts to interpret the data available.
I understand that any false statement may be punishable by fine or imprisonment under 18 U.S. Code, Section 1001.

CERTIFIER'S NAME J. LUCKEY SANDERS LICENSE NUMBER 4554

TITLE LAND SURVEYOR COMPANY NAME SANDERS SURVEYORS

ADDRESS	CITY	STATE	ZIP CODE
210 CLELAND STREET	GEORGETOWN	SC	29440

SIGNATURE	DATE	TELEPHONE
J Luckey Sanders	03-13-07	843-527-2300

IMPORTANT: In these spaces, copy the correspondin formation from Section A.			For Insurance Company Use:
BUILDING STREET ADDRESS (Including Apt., Unit, Suite, and/or Bldg. N. X P.O. ROUTE AND BOX NO. Intersection of Prince Street & Bolick Street			Policy Number
CITY Georgetown	STATE SC	ZIP CODE 29440	Company NAIC Number

SECTION D - SURVEYOR, ENGINEER, OR ARCHITECT CERTIFICATION (CONTINUED)

Copy both sides of this Elevation Certificate for (1) community official, (2) insurance agent/company, and (3) building owner.

COMMENTS
GROUND FLOOR ENCLOSURE TO BE LESS THAN 300 SQ. FT.

☐ Check here if attachments

SECTION E - BUILDING ELEVATION INFORMATION (SURVEY NOT REQUIRED) FOR ZONE AO AND ZONE A (WITHOUT BFE)

For Zone AO and Zone A (without BFE), complete Items E1 through E4. If the Elevation Certificate is intended for use as supporting information for a LOMA or LOMR-F, Section C must be completed.

E1. Building Diagram Number _(Select the building diagram most similar to the building for which this certificate is being completed – see pages 6 and 7. If no diagram accurately represents the building, provide a sketch or photograph.)

E2. The top of the bottom floor (including basement or enclosure) of the building is __ ft.(m) __in.(cm) ☐ above or ☐ below (check one) the highest adjacent grade. (Use natural grade, if available).

E3. For Building Diagrams 6-8 with openings (see page 7), the next higher floor or elevated floor (elevation b) of the building is __ ft.(m) __in.(cm) above the highest adjacent grade. Complete items C3.h and C3.i on front of form.

E4. The top of the platform of machinery and/or equipment servicing the building is __ ft.(m) __in.(cm) ☐ above or ☐ below (check one) the highest adjacent grade. (Use natural grade, if available).

E5. For Zone AO only: If no flood depth number is available, is the top of the bottom floor elevated in accordance with the community's floodplain management ordinance?
☐ Yes ☐ No ☐ Unknown. The local official must certify this information in Section G.

SECTION F - PROPERTY OWNER (OR OWNER'S REPRESENTATIVE) CERTIFICATION

The property owner or owner's authorized representative who completes Sections A, B, C (Items C3.h and C3.i only), and E for Zone A (without a FEMA-issued or community-issued BFE) or Zone AO must sign here. *The statements in Sections A, B, C, and E are correct to the best of my knowledge.*

PROPERTY OWNER'S OR OWNER'S AUTHORIZED REPRESENTATIVE'S NAME

ADDRESS | CITY | STATE | ZIP CODE

SIGNATURE | DATE | TELEPHONE

COMMENTS

☐ Check here if attachments

SECTION G - COMMUNITY INFORMATION (OPTIONAL)

The local official who is authorized by law or ordinance to administer the community's floodplain management ordinance can complete Sections A, B, C (or E), and G of this Elevation Certificate. Complete the applicable item(s) and sign below.

G1. ☐ The information in Section C was taken from other documentation that has been signed and embossed by a licensed surveyor, engineer, or architect who is authorized by state or local law to certify elevation information. (Indicate the source and date of the elevation data in the Comments area below.)

G2. ☐ A community official completed Section E for a building located in Zone A (without a FEMA-issued or community-issued BFE) or Zone AO.

G3. ☐ The following information (Items G4-G9) is provided for community floodplain management purposes.

G4. PERMIT NUMBER	G5. DATE PERMIT ISSUED	G6. DATE CERTIFICATE OF COMPLIANCE/OCCUPANCY ISSUED

G7. This permit has been issued for: ☐ New Construction ☐ Substantial Improvement

G8. Elevation of as-built lowest floor (including basement) of the building is: ____.__ft.(m) Datum: ____

G9. BFE or (in Zone AO) depth of flooding at the building site is: ____.__ft.(m) Datum: ____

LOCAL OFFICIAL'S NAME | TITLE

COMMUNITY NAME | TELEPHONE

SIGNATURE | DATE

COMMENTS

☐ Check here if attachments

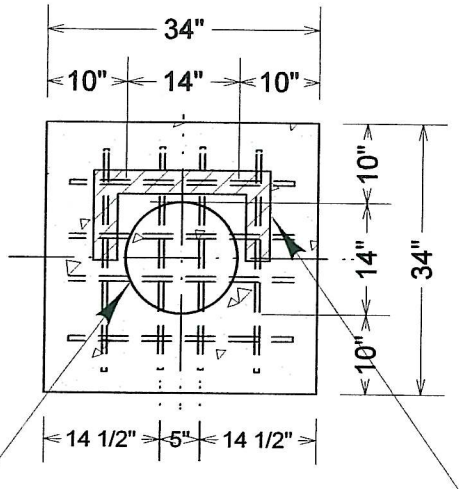

PLAN VIEW

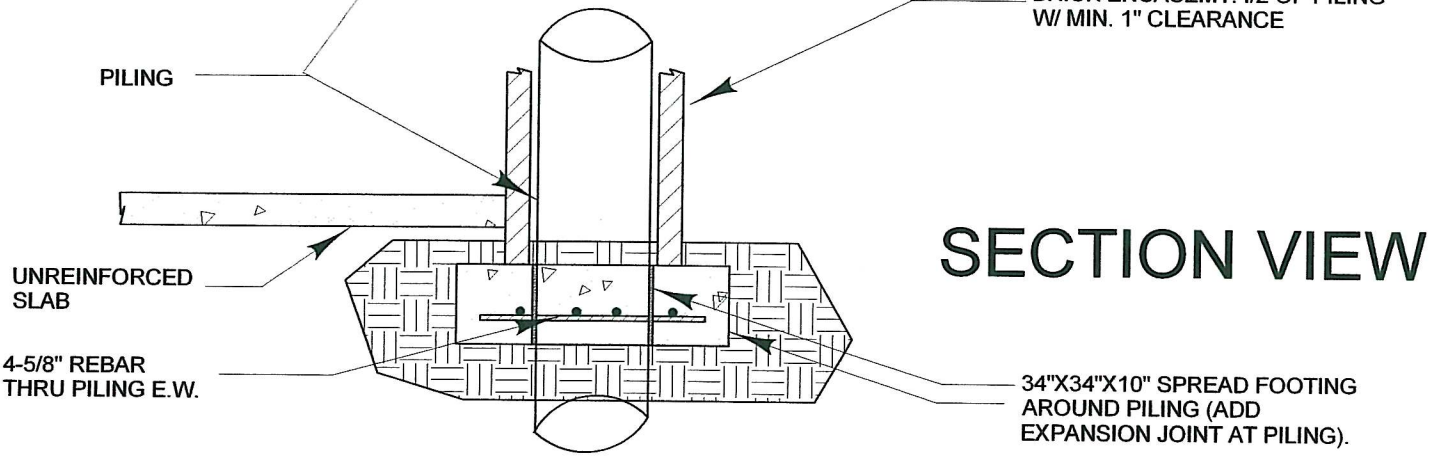

SECTION VIEW

PLAN & SECTION DETAIL

ENGINEER'S SIGNATURE & SEAL

11/16/2007